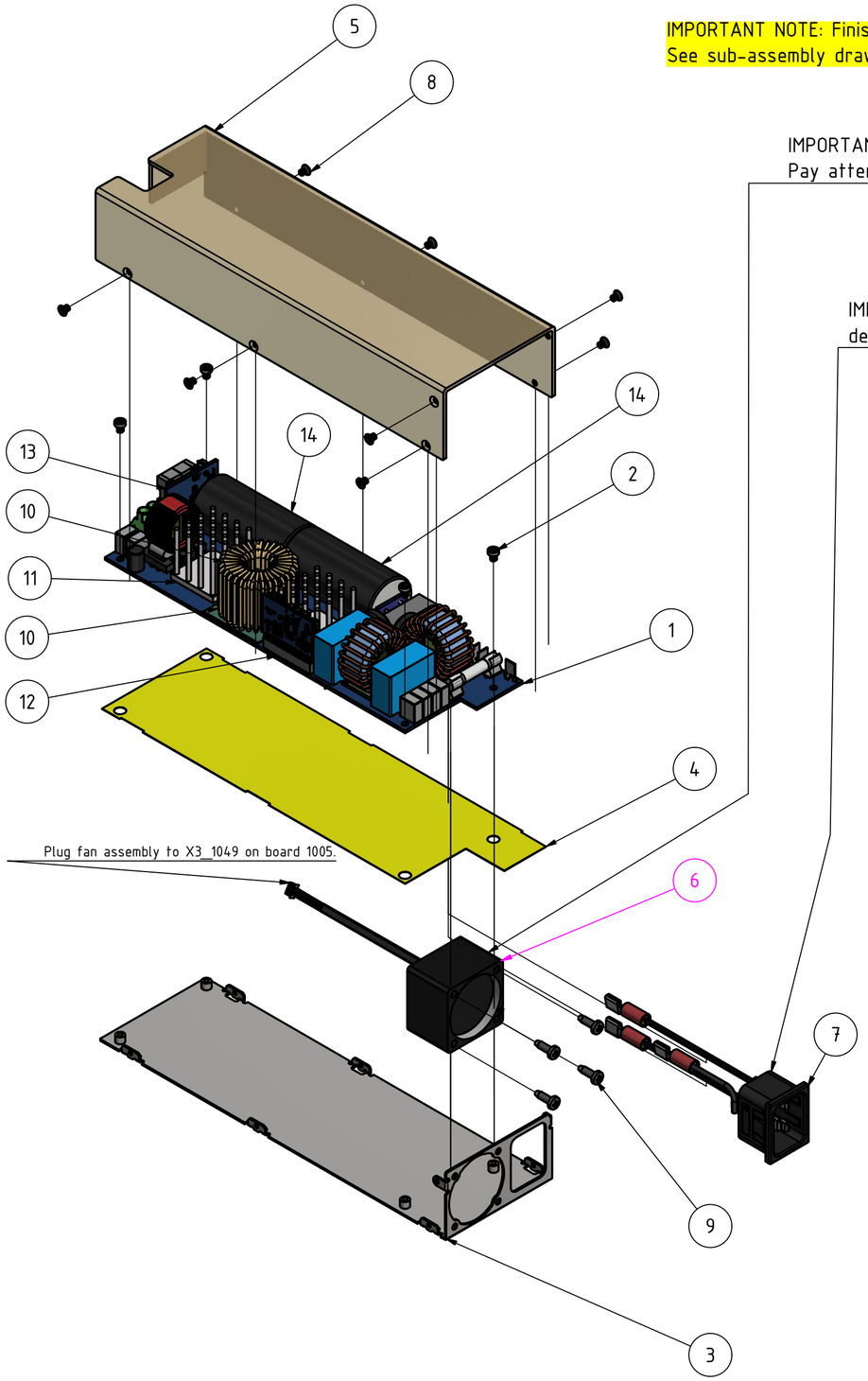

IMPORTANT NOTE: Finish all sub-assemblies first, before assembling the whole board!
See sub-assembly drawings!

IMPORTANT NOTE: The fan is vacuuming air out of the case assembly.
Pay attention to the arrows indicating the direction of the airflow.

IMPORTANT: Pay extra attention to the jumper wire assembly and the direction of cennections, described in the sub-assembly.

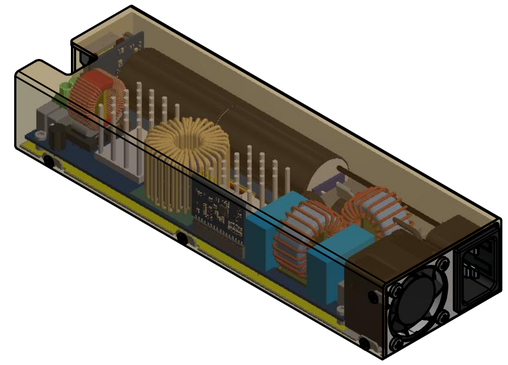

BILL OF COMPONENTS

OBJECT	QUANTITY	DESCRIPTION	SUPPLIER	REFERENCE NO.
1	1	M100002853 Mainboard		M100002853
2	4	M3x4 screw, cylinder head	Generic	
3	1	HO100002851 metal chassis		HO100002851
4	1	IS100002850 Isolation foil		IS100002850
5	1	CT100002850 Acrylic glass cover		CT100002850
6	1	Fan assembly, see sub assembly drawing FA100002854		FA100002854
7	1	IEC AC Connector assembly, see sub-assembly drawing IN100002854		IN100002854
8	8	M3 x 4 screw, countersunk head	Generic	
9	4	AS B194 - Nr. 6 x 7/16-PR2 B	RS-Components	4828076
10	1	L3 choke + isolation foil, see sub-assembly drawing IS200002850 for isolation		IS200002850
11	2	Heatsink assembly, see sub-assembly drawing HT100002854		HT100002854
12	1	Control card CD100002854		CD100002854
13	1	Bias Supply unit		M100002321
14	2	C100002854 Capacitor board		C100002854
14	2	C100002854 Capacitor board		C100002854

Status	Änderungen	Datum	Name
		Gezeichnet	11.03.2021 Wernegger
		Kontrolliert	
		Norm	

Overall assembly instructions

Assembly P100002853 | 1 | A2